Thank you for choosing a NIVELCO instrument.
We are sure that you will be satisfied throughout its use!

NIVOROTA

ROTARY PADDLE LEVEL SWITCH

USER'S MANUAL

Manufacturer:
NIVELCO Process Control Co.
H-1043 Budapest, Dugonics u. 11.
Phone: (36-1) 889-0100 ■ Fax: (36-1) 889-0200
e-mail: sales@nivelco.com ■ www.nivelco.com

CE 1418

1. INTRODUCTION

The NIVOROTA E-700/800 rotary paddle level switch series of can be used for detecting level of granular or powdery materials and free flowing solids. Mounted to tanks, silos and hoppers it can monitor and control level, filling and emptying of stored materials such as stone, fly ash, sand, coal, feed, beet slice, etc.

A small power motor drives the paddle, which rotates freely in the absence of the material. When the paddle is immersed by the material reaching it, the motor will be switched off the same time triggering the output contact switch. When the material level drops, the paddle runs free again, the motor is reactivated and the switch returns to its original state. The number of paddle-vanes (single or 3-vane) and the adjustment of the torque spring should be done in accordance to the density or the granular size of the medium.

The single vane paddle will pass through the 1" hole, the 3-vane paddle can be mounted only by a mounting plate. The suitable paddle should be chosen in accordance to the medium. The single vane paddle is recommended for higher density granular solids, the 3-vane paddle is recommended for lower density powdered solids.

Using a flexible coupling the shaft of the device can be protected against hard mechanical effects caused by falling of stone or other coarse material. When the insertion length of the Standard version is not enough, rod or cable extended version can be applied. If insertion length should be customized for any technological reason, optional sliding sleeve can be used for rod extended versions, or cutting the cable to the needed length can be performed in case of cable extended versions. The counterweight provides taut state for the cable and prevent that the paddle may 'shin up' to the medium surface.

The process connection is threaded or it is a mounting plate. The mounting plate is welded to the unit. For the threaded units an optional threaded mounting plate can be ordered.
Dust Ex version of the device is also available.

2. TECHNICAL DATA

2.1 General data

Version		Standard	Rod extended	Cable extended
Insertion length (L)		200 mm	0.4 … 3 m	1 m … 3 m
Number and material of the vanes		1- or 3-vane; 1.4571		
Process connection		1" BSPT; 1½" BSPT; mounting plate (the BSPT thread can be screwed into a BSP or an NPT thread)		
Material of wetted parts		1.4571, NBR (sealing)		
Medium density (guideline value)		Min. 0.1 kg/dm³		
Medium temperature	Normal	With plastic housing: -20 °C …+80 °C, With aluminium housing: -20 °C …+120 °C High temperature type: -20 °C …+200 °C		
	Dust Ex	-20 °C …+ 85 °C		
Ambient temperature		-30 °C …+ 60 °C		
Relative humidity		Max. 90%		
Medium pressure		Max. 3 bar (0.3 MPa)		
Power supply range		Normal value: 230 V AC (50/60Hz) +10 % -15%, 120 V AC (50/60Hz) +10 % -15% 24 V AC (50/60Hz) +10 % -15%, 24 V DC +10 % -15%		
Rotation speed		0.83 rotation/minute (@50Hz)		
Power consumption		Max 4VA (4W)		
Output		microswitch - SPDT 250 V AC, 10A, AC1		
Paddle-rotation/ shutdown indication		Bi-colour (green/red) LED		
Electrical connection		2x M20 x 1.5 plastic cable glands for 6-12 mm cable diameter Terminal, recommended wire cross section: 0.5…1.5 mm²		
Electrical protection		Class I.		
Ingress protection		IP67		
Housing material		Metal: painted aluminium cast, Plastic: fibreglass PBT		
Mass		1.6kg	1.6kg + extension 0.16kg/dm	2.6kg + extension 0.14kg/dm

2.2 Special data for Ex certified models

Electrical connection	2x M20 x 1.5 steel cable glands, cable outer diameter: 8-13 mm
Ex marking	Ex II 1D Ex ta IIIC T85 °C Da[1]

[1] Approval is pending

2.3 Accessories

- User's manual
- Warranty Card
- Declaration of Conformity
- 1-vane or 3-vane paddle (as per order code), 2 pcs. split pin

2.4 Order Code

NIVOROTA E □ □ – □ □ □ – □ [1]

Type	Code
Normal	K
High temperature	H

Version/paddle/process connection	Code
Standard/1-vane/1" BSPT	A
Standard/1-vane/1 ½" BSPT	H
Standard/3-vane/1 ½" BSPT	F
Rod extended/1-vane/1 ½" BSPT	R
Cable extended/1-vane/1 ½" BSPT	K
Cable extended /3-vane/1 ½" BSPT	L

Housing	Code
Aluminium	7
Plastic [2,3]	8

Code	Insertion length		Code
0	0 m	0 dm	0
1	1 m	1 dm	1
2	2 m	2 dm	2
3	3 m	3 dm	3
		4 dm	4
		5 dm	5
		6 dm	6
		7 dm	7
		8 dm	8
		9 dm	9

Power supply / Ex	Code
230V AC	1
120 V AC	2
24 V AC	3
24 V DC	4
230 V AC/Ex[4]	5
120 V AC/Ex[4]	6
24 V AC/Ex[4]	7
24 V DC/Ex[4]	8

① The order code of an Ex version should end in 'Ex'
② Not available in Ex version
③ Not available in high temperature type
④ Approval is pending

Accessories to order:

Paddles

Name	Code
1-vane paddle	EKA-702-1M-300-00
3-vane paddle	EKF-702-1M-300-00
Split pin (3x20)	4cesp3x20ykoy

Mounting accessories

Name	Code
1" female nut/1.4571	EAM-701
1 ½" female nut /1.4571	EAM-702
Sliding sleeve for rod extended version	EAM-703
Mounting plate, 1" hole/1.4571	EAM-704
Mounting plate, 1" hole/carbon steel	EAM-705
Mounting plate, 1 ½" hole/1.4571	EAM-706
Mounting plate, 1 ½" hole/carbon steel	EAM-707
Mounting plate sealing	EAM-704-1M-003

Name	Code
Counterweight	EAW-701

Name	Code
Flexible coupling	EAS-701

2.5. Dimensions

2.5.1 Units

Standard version with 1-vane paddle

EK□-□02-□

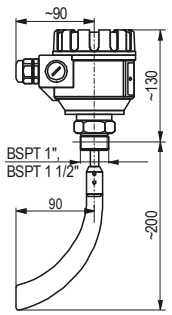

Standard version with 1-vane paddle and flexible coupling

EK□-□03-□

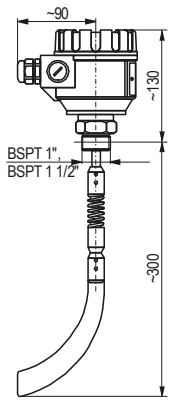

Standard version with 3-vane paddle

EKF-□02-□

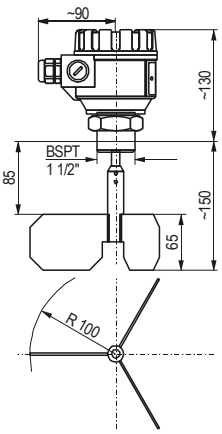

Rod extended version, with 1-vane paddle

EKR-□□□-□

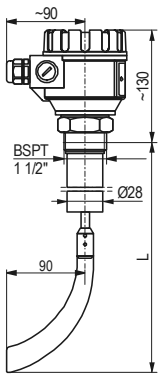

Cable extended version, with 1-vane paddle and counterweight

EKK-□□□-□

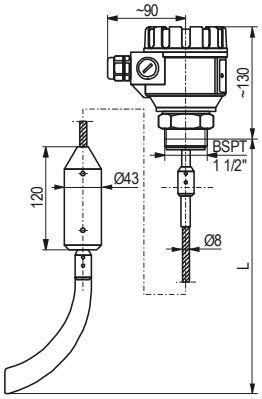

Cable extended version with counterweight, with 3-vane paddle

EKL-□□□-□

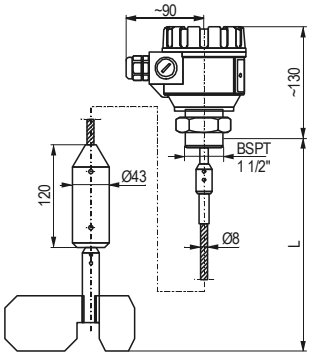

High temperature type standard version, with 1-vane paddle

EH□-□02-□

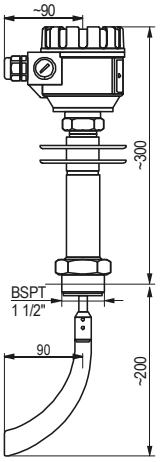

2.5.2 Accessories

1-vane paddle	3-vane paddle	Flexible coupling
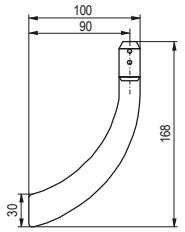	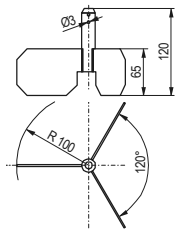	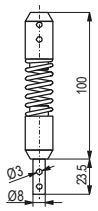

Mounting plate	Sliding sleeve for rod extended version
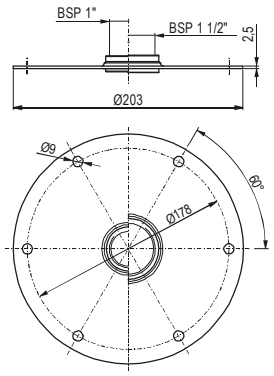	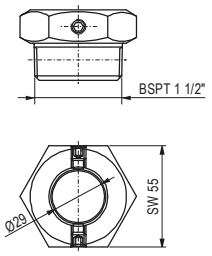

3. MOUNTING

The unit should be protected against strong material inflow by appropriate selection of the mounting position or by using an overhead protective shield. When the instrument is mounted on the side of the tank, coning or arching of the material should be taken into consideration. A location with the least mechanical vibration is preferred for the unit. The single vane paddle will pass through the 1", or the 1 ½" hole. In case of using a mounting plate, proper cut-out (∅150 mm) is important, because if the diameter is wrong, the 3-vane paddle will not pass through the hole. Above 0.5 m rod extension the rod is advised to be fixed to the tank wall. When using the unit for low fail-safe indication, installation of a deflector element is necessary.

Protection with a protective shield

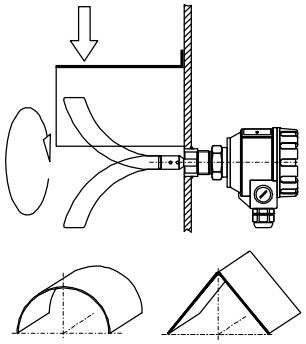

Protective shield

Connection for mounting plate (recommendation)

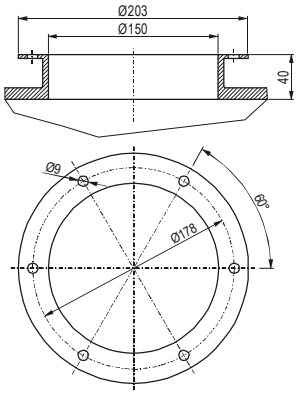

Side mounting

Correct

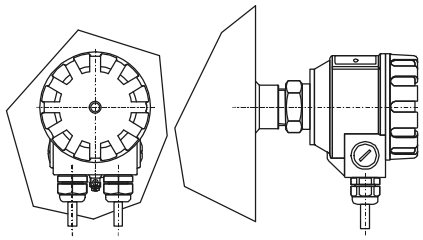

Incorrect

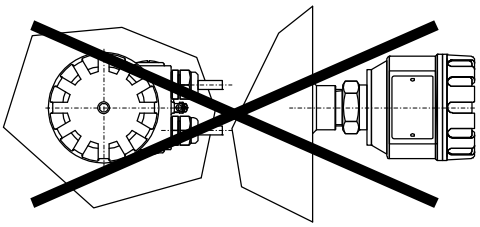

Mounting

Correct

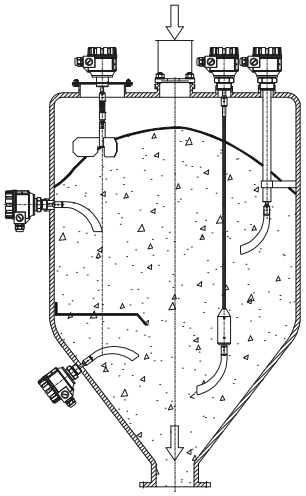

Incorrect

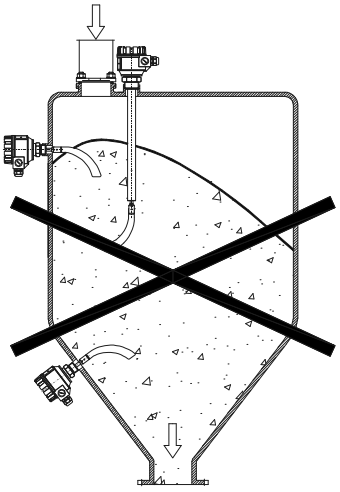

The housing can be rotated after the mounting! **In case of side-mounted units, the cable glands should be downwards!**

4. MOUNTING

The paddle should be fixed with the two attached pins. In case of cable extended units, the cable can be fixed the by same way with the pins. For customisation of the cable extension the slotted set screws with cone point should be loosened from the lower cable-holder. After removing the slotted set screws with cone point, the cable can be cut to the required length, and then the cable-holder should be replaced. Before this, do not forget to put back the counterweight to the cable!

In case of rod extended versions if modification of the insertion length is needed, it is possible with the optional sliding sleeve accessory. The sliding sleeve needs a 1 ½" whole.

The devices have 1" BSPT, 1 ½" BSPT threaded, or mounting plate process connection. The BSPT thread can be screwed into a suitable BSP, or an NPT threaded whole with the help of the hexagon neck (SW 41 size wrench is suitable for 1", SW 55 for 1 ½"). The single vane paddle passes through the hole.

By mounting with the 1" (SW 46 size), or the 1 ½" (SW 60 size) female nut, because the BSPT screw spacers should be applied depending on the thickness of the tank wall. By mounting with the mounting plate, before the installation the attached sealing should be placed under the mounting plated and then fixed with the screws.

5. WIRING

The device should be connected to the functional grounding with its internal or external grounding screw!

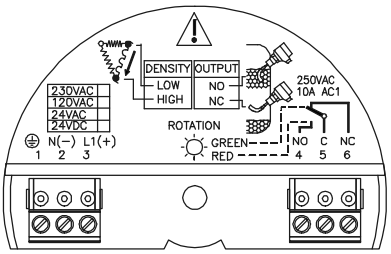

6. OPERATION

The unit is fully operational after the mounting and the wiring. If the paddle is rotating free (not immersed in the medium) the status LED lights green. When the medium reaches the paddle the output microswitch changes its state, the motor stops the rotation and the status LED turns to red.

When the medium leaves the paddle, the motor will be reactivated, the paddle starts to rotate, the output microswitch changes its state and the status LED turns to green again. The indication of the status LED can be seen on the cover of the housing.

The paddle-strainer spring provides reliable operation in case of different bulk density materials. Default state of the DENSITY torque spring is 2. This 2nd position is suitable for almost all applications.

When the density or the granular size of the medium is not consistent with the number of paddle-vanes, it may be possible that the medium is not able to stop the rotation of the paddle and the output switch does not change its state despite that the medium has reached the paddle. In this case, try to adjust the 4-state position of the DENSITY torque spring according to the density of the material (for lower density lower torque setting should be used).

The medium to be measured may stick to the side-mounted paddle. However NIVLECO recommends top-mounting installation of NIVOROTA devices in case of sticky materials, straining the spring (into HIGH state) can result reliable switching in many cases.

Operation status:

Power supply	Status LED	Paddle	Output
ON	Green	Rotate	NO
	Red	Not rotate	NC
OFF	Dark	Not rotate	NO

7. MAINTENANCE, REPAIR

The device does not require regular maintenance. In some instances, however, the unit may need occasional cleaning to remove material deposits. All repairs during or beyond the warranty period are to be carried out at the manufacturer's premises.

8. STORAGE

Ambient temperature: -30 °C …+ 60 °C
Relative humidity: max. 98%

9. WARRANTY

NIVELCO provides warranty of 3 (three) years in compliance with details described in the Warranty Card.

eka7021a0600h_02
2011. October
NIVELCO reserves the right to change technical data without notice!